CHAPTER 1

INTRODUCTION

INTRODUCTION

Health care systems are very important part of the economy of any country for the public health. Patient monitoring systems measure physiological characteristics either continuous or at regular interval of time. The recent survey of WORLD HEALTH ORGANIZATION estimated approximately 5.6 million people were paralyzed responding 1.9% population, roughly I among 50.

We come across hospitals and NGOs & homes serving paralytic patients who have their whole or partial body disabled by the Paralysis attack. These people in most cases are not able to convey their needs as they are neither able to speak properly nor do they convey through sign language due to loss in motor control by their brain. In such a situation we propose a system that helps disabled person in displaying a message over the LCD by just simple motion of any part of his body which has motion abilities. To overcome the problem this monitoring system is introduced. This system also takes care of the situation where in no one is present to attend the patient ,at that time buzzer will start ringing .Our proposed system works by reading the tilt direction of the user part. The working of the device here is shown by holding in the fingers of the mobile hand. The user now just needs to tilt the device in a particular angle to convey a message. Tilting the device in different directions conveys a different message. Here we use accelerometer in order to measure the statistics of motion. It then passes on this data to the microcontroller. The microcontroller processes the data and displays the particular message as per input obtained. The microcontroller now displays the associated message on the LCD screen. It also sounds a buzzer along with message as soon as it receives motion signal from the accelerometer.

In this way the Automated Paralysis Patient Care System truly automates the care taking ability of the patient which ensures a timely attention to the patient and thus for a good health of the patient.

1.1 Background Study:

Paralysis is the inability to move muscles on your own and with purpose. It can be temporary or permanent. The most common causes are stroke, spinal cord injury, and multiple sclerosis. Paralysis can be a complete loss of movement known as plegia, or significant weakness called paresis. For example, monoplegia/monoparesis is a complete loss movement or weakness of one limb. Hemiplegia/hemiparesis is a complete loss of movement or weakness of arm and leg on same side of the body. Paraplegia/paraparesis is a complete loss of both legs. Tetraplegia/tetraparesis is complete loss of both arms and both legs. Paralysis is caused by injury or disease affecting the central nervous system which means has the nerve signals sent to the muscles is interrupted.

These people in most cases are not able to convey their needs as they are neither able to speak properly nor do they convey through sign language due to loss in motor control by their brain. In such a situation we propose a system that helps disabled person in displaying a message over the LCD by just simple motion of any part of his body which has motion abilities.

Our proposed system works by reading the tilt direction of the user part. The working of the device here is shown by holding in the fingers of the mobile hand. The user now just needs to tilt the device in a particular angle to convey a message. Tilting the device in different directions conveys a different message.

1.2 Objectives and Scopes:

The paralysis people in most cases are not able to convey their needs as they are neither able to speak. Hence, we introduced this system which fulfills the requirements.

1. Develop friendly sustainable appliance control system:

   Developing a system relies on minimum effort of learning curve & works efficiently. As peoples are physically disabled, therefore we decided to work with the motion of mobile hand.

2. Design innovative solutions:

   This system communicates over wireless technology, so that wire hassle is reduced. Various sensors & module shape up this as an innovative solution.

According to the availability of sensors or development in biomedical trend more parameter can be sensed and monitor which will drastically improved the efficiency of the wireless monitoring system in biomedical field.

Here we can also use flex sensor. A flex sensor is a sensor that measures amount of bending or deflection. Usually, the sensor is stuck to the surface and resistance of a sensor element is varied by bending the surface. Since the resistance is directly proportional to the amount of bend, it is used as goniometer and often called flexible potentiometer.

1.3.1 Block diagram and description:

Block diagram of transmitter:

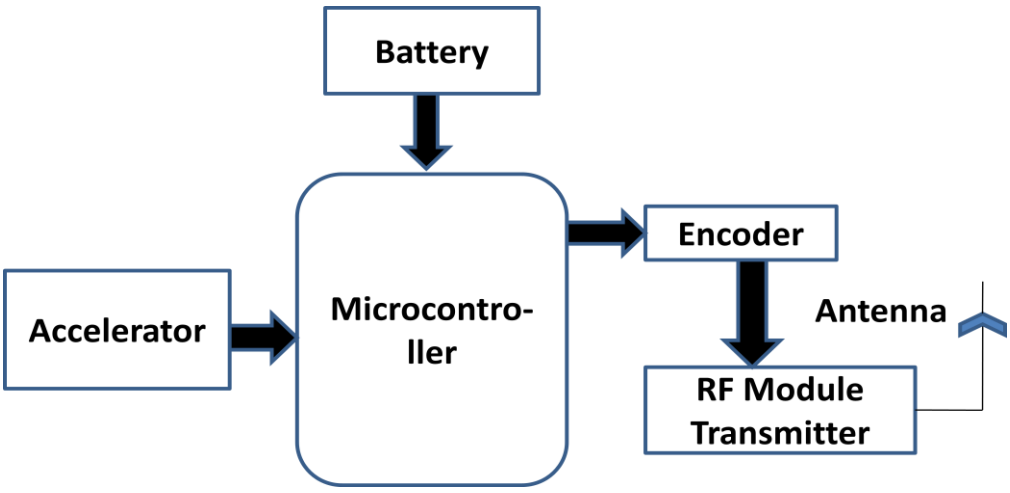

Fig. 1.1 a. block diagram of transmitter

Block Description:

Accelerometer:

The ADXL335 is a complete 3 axis acceleration measurement system. The output signals are analog voltages that are proportional to acceleration. The accelerometer can measure the static acceleration of gravity in tilt-sensing applications as well as dynamic acceleration resulting from motion, shock, or vibration.
Here it is used to detect the hand motion and gives particular voltage level to microcontroller depending on in which direction it has moved.

Arduino Microcontroller:

It is the building block of this transmitter block. It collects the signal from accelerometer and decides which message has to be displayed on the LCD of the receiver.

Encoder and RF transmitter:

An encoder is a device, circuit, transducer that converts information from one format into another format i.e it converts the signal from coming from microcontroller into 2 or 4 bits. RF transmitter is used to transmit the signal.

Supply:

5V supply is required

1.3.2 Block diagram of receiver:

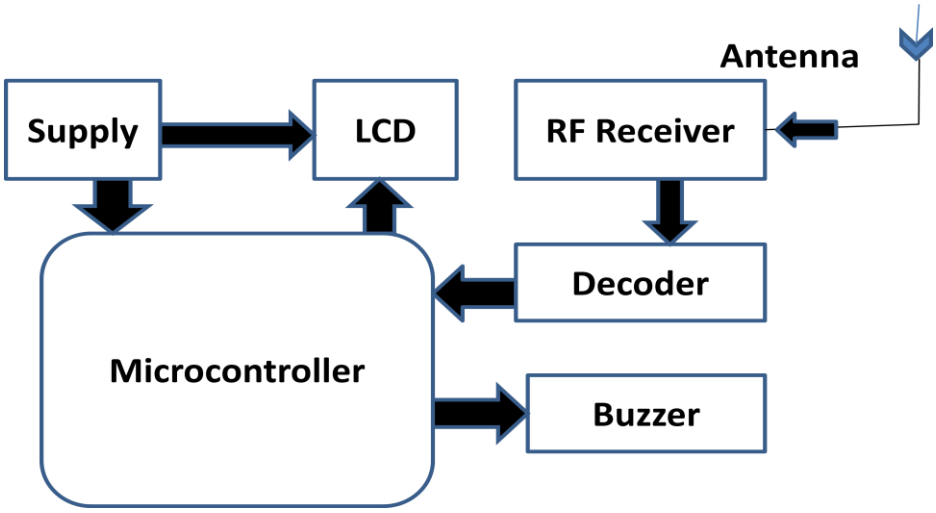

Fig.1.1 b. Block diagram of receiver

Block description:

Microcontroller:

This module is the central control unit of the system. It collects the decoded data from decoder and decides which message has to be displayed on LCD.

Decoder and RF receiver:

A decoder can take the form of a multiple inputs, multiple output and converts coded input into coded output. RF receiver receives the signal which is transmitted by RF transmitter via antenna.

LCD:

16x2 character display is used in system for displaying particular message.

Supply:

5v supply is required.

CHAPTER 2

LITERATURE REVIEW

LITERATURE REVIEW:

NAME OF PAPER	AUTHOR	DISCRIPTION	DISADVANTAGES
1.Assisting System for Paralyzed	Prof. R. k. Moje Prof. Abhijeet Botre	The primary purpose of this is to purpose the system that can assist the paralyzed. It does by using IR based eye blink sensor and long blinks of eye are used to control the appliances efficiently	Less secure Less efficient
2.Motion based message conveyer for paralytic	Prof. Aishwarya Desai, Nupur Behrani	The main aim of project is to implement low cost system which help to establish communication between patient and nurse. Along with this real time medicine remainder and emergency buzzer is used.	Not useful for large area.

3.Thought translation for Paralytic patient.	Prof. Herta Flor	The purpose of this is to transmit the message without using body parts, such that by analysing the thoughts of Paralytic Patient.	Complicated to use.
4 Automated paralysis patient healthcare system	Prof. Chandan. V. Jha	It includes control of paralytic patient according to hand motion	Expensive

CHAPTER 3

METHEDOLOGY

METHODOLOGY:

1. First of all we studied all the components properly.
2. After that, we were search the required circuit diagram.
3. We had found out the cost of required material from project & collect it from market.
4. Then we were design circuit layout using PCB layout software. i.e. we studied Layout +, Capture CIS software for designing supply.
5. Now after software design, we move towards design of PCB by using layout and then soldered it.
6. Run it & check the result.
7. After design of supply we move towards design of circuit diagram of transmitter and receiver on Proteus Software.
8. Then we designed circuit layout of transmitter and receiver using layout + software.
9. After software design, we were design the PCB according to layout and then solder it.
10. After over all this, we tested actual working of overall project completed by us.

3.1. Hardware Implementation:

3.1.1 1) Circuit Diagram of transmitter:

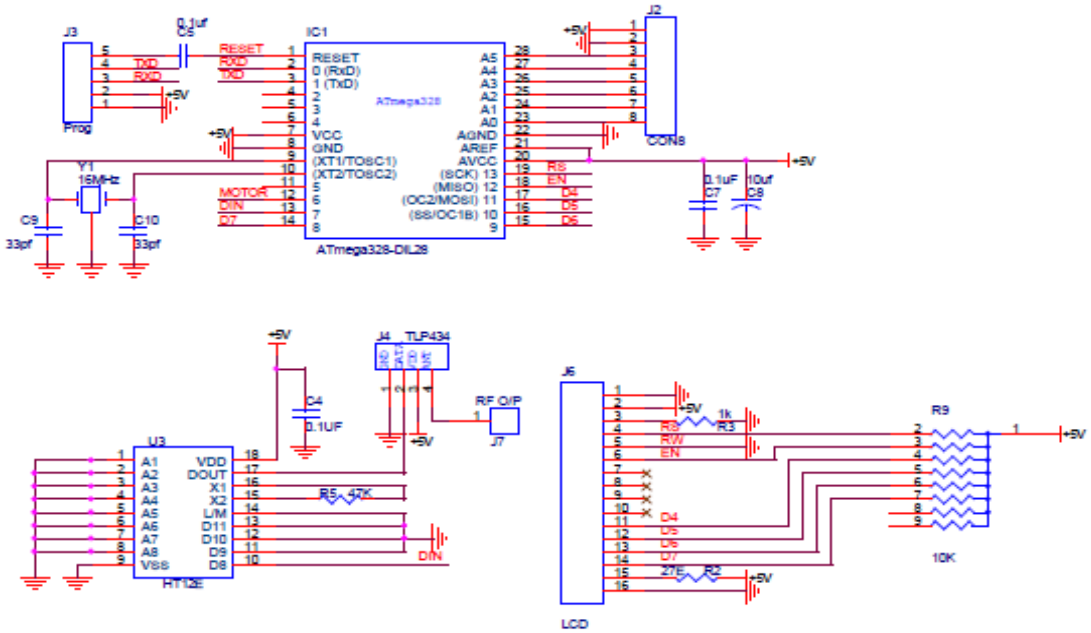

Fig. 3.1.1.a Circuit diagram of transmitter

3.1.1 2) PCB Layout:

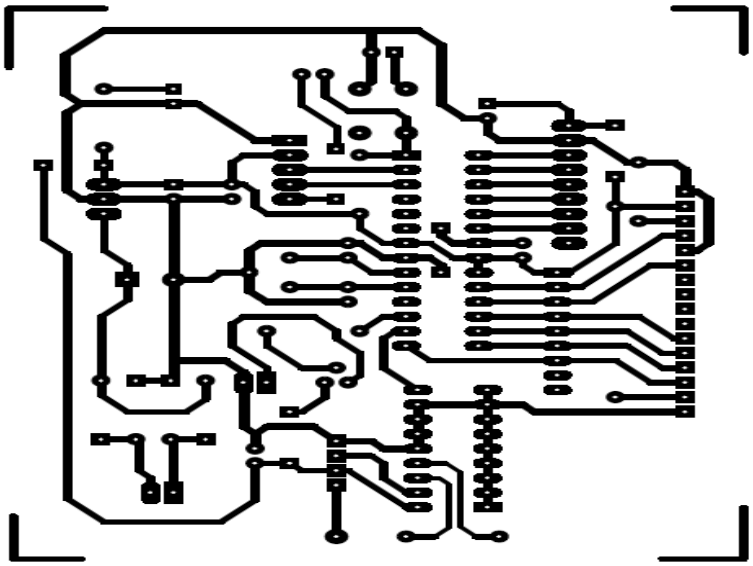

Fig.3.1.1.b PCB layout

3.1.2 Working:

1. 5V supply is used for the transmitter.
2. Adxl 335 accelerometer sensor is used here to detect the motion of hand.
3. ATmega328P arduino microcontroller is the main part i.e building block of this project.
4. HT12E encoder and RF transmitter is also used to transmit the message wirelessly to receiver with the help of antenna.
5. When hand movement takes place, accelerometer detects it and send the signal to arduino.
6. Arduino has on chip ADC, so it will convert that analog signal to digital signal and then it passes to encoder
7. Encoder encodes the message whether it is in 2 bit or 4 bit.
8. Then encoder fed encoded message to RF transmitter and then it is transmitted through antenna.
9. Here we have set some threshold value for accelerometer so when it crosses that level particular message is displayed on the LCD.

3.1.3 1) Circuit Diagram of receiver:

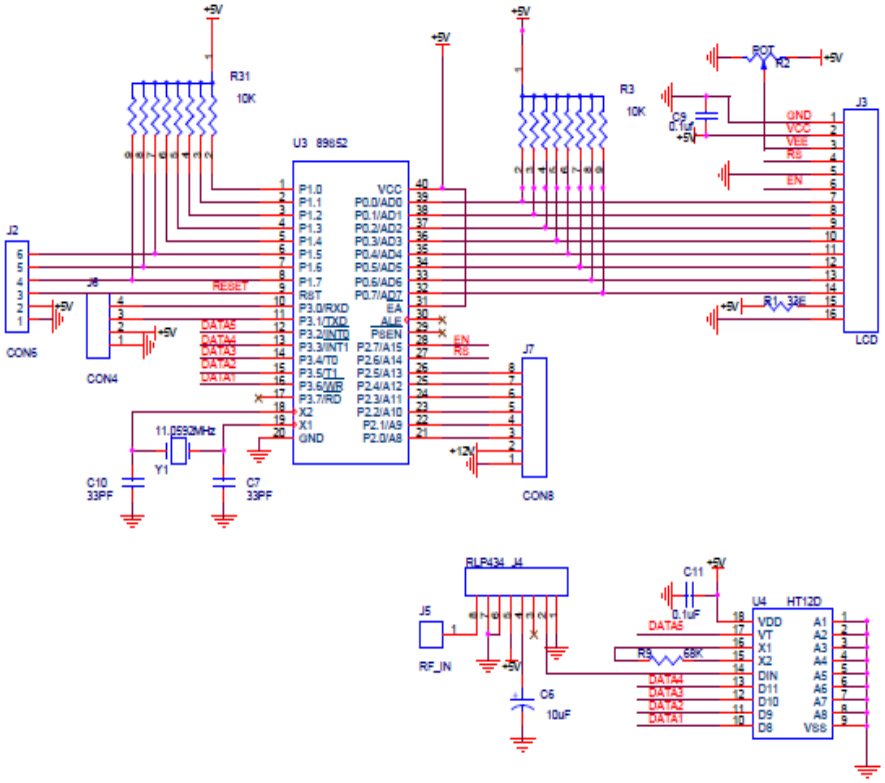

Fig. 3.1.3.a Circuit diagram of receiver

3.1.3 2) PCB Layout:

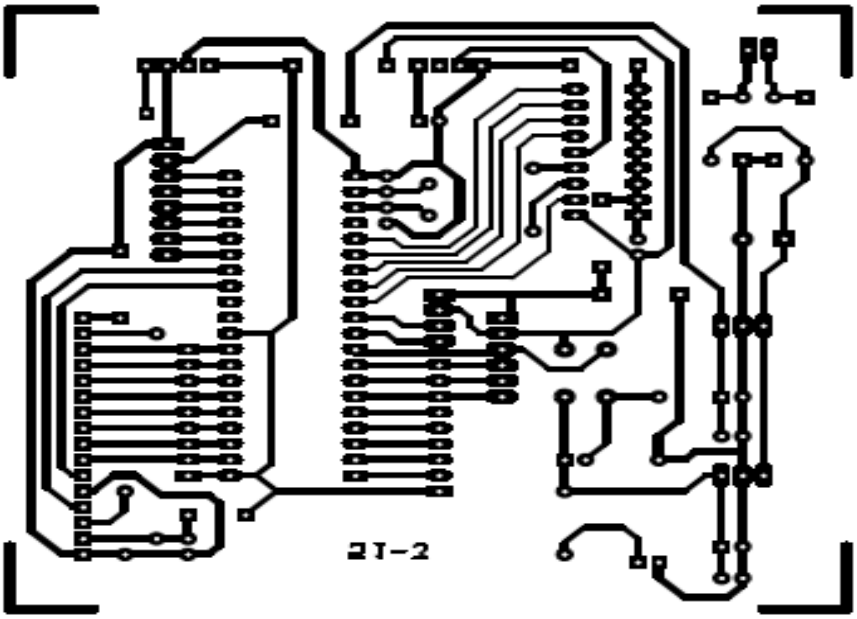

Fig.3.1.3.b PCB Layout

3.1.4 Working:

1. 5V supply is required for receiver and antenna is used to receive the message.
2. Received message is fed to decoder. Decoder decodes the message whether it is 2 bit or 4 bit.
3. Decoded message is fed to 8051 microcontroller.
4. According to controller output buzzer sounds up with displaying respective message on LCD.

3.1.5 Hardware Requirement:

a. Power supply
b. Arduino Microcontroller
c. 8051 Microcontroller
d. RF Transmitter and Receiver
e. Accelerometer
f. LCD

Description:

a. POWER SUPPLY:

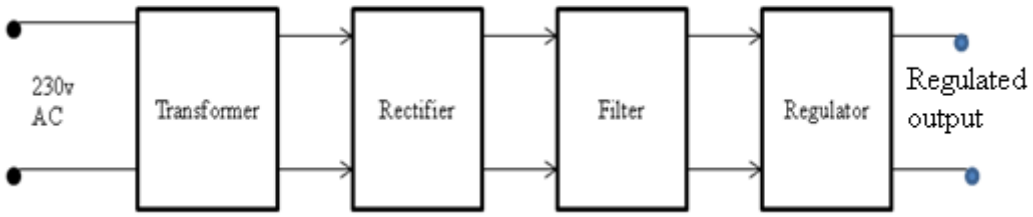

Fig. 3.1.5 a. Block diagram of power supply

1. TRANSFORMER: It is used to step-down the voltage.

2. RECTIFIER: It converts AC input to DC output.

3. FILTER: It removes AC component present in DC output & provide pure DC output.

4. REGULATOR: It provides constant regulated DC output.

b. ARDUINO (ATmega328p avr):

Arduino is development board that houses a microcontroller on it. Arduino is very easy to operate and work with, even though it is a very powerful computer like gear. Arduino is open source electronic gear meaning it costs an affordable price for its hardware for running the

micro controller is free for everyone. Arduino can be connected with various sensors or other electronic component to build a device which will able to do certain functionality.

- **Features:**

The Atmel 8 bit AVR RISC based micro controller combines-

- 32kB ISP flash memory with read and write capabilities
- 1kB EEPROM
- 2kB SRAM
- 23 I/O lines
- 32 general purpose working registers
- 3 timers/counters with compare mode
- Internal and external interrupts
- Programmable watch dog timer with internal oscillator.

- Why Arduino (ATmega328p avr)?

1. ATmega328 is faster than 8051 as it uses lesser number of clock cycles for instruction execution.
2. In ATmega328 you can use internal oscillator, saving additional circuitry. But in 8051 you have to add an external crystal oscillator.
3. If you are making a small project which needs to store only few bytes in EEPROM in ATmega328. But in 8051 you have to add an external EEPROM even to store one byte. In addition, you have to add more functions and protocol to access EEPROM in 8051. In ATmega328 you can access the internal EEPROM by setting some registers and inbuilt functions.
4. If you have to use PWM in ATmega328, there are dedicated pins and timer modes. It is much easier to use PWM in ATmega328 than in 8051.

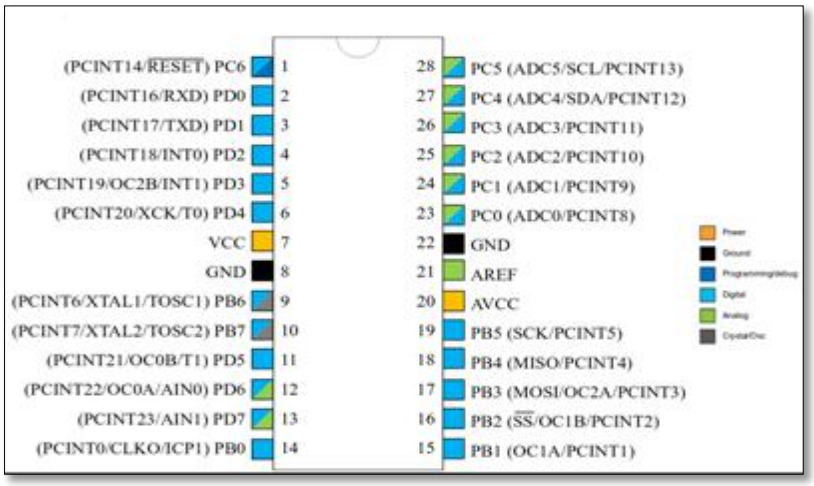

Fig.3.1.5.b. Pin out diagram of Arduino

c. MICROCONTROLLER:

The AT89S51 is a low power, high performance CMOS 8 bit microcontroller with 8k bytes of in System Programmable Flash memory. By combining a versatile 8 bit CPU with in System Programmable Flash memory on a monolithic chip, the AtmelAT89S51 is powerful microcontroller which provides highly flexible and cost-effective solutions to many embedded control applications.

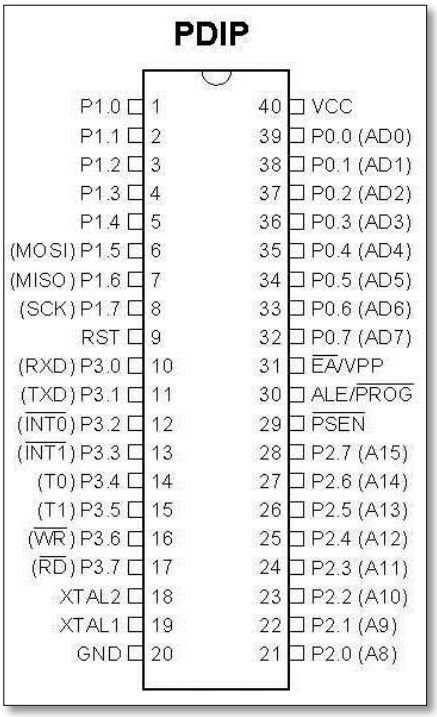

Fig.3.1.5.c Pin out diagram of microcontroller

Features:

- 4k bytes of flash
- 256 bytes of RAM
- 32 I/O lines
- Two 16 bit timer/counter
- 6 interrupt sources
- Clock circuitry
- Dual data timer
- Full duplex USART serial channel
- Watchdog timer

d. ACCELEROMETER ADXL335:

The ADXL335 is a complete 3 axis acceleration measurement system. The ADXL335 has measurement range of +3g or -3g minimum. It contains a polysilicon surface micro-machined sensor and signal conditioning circuitry to implement an open loop acceleration measurement architecture. The output signals are analog voltages that are proportional to acceleration. The accelerometer can measure the static acceleration of gravity in tilt-sensing applications as well as dynamic acceleration resulting from motion, shock, or vibration.

The deflection of the structure is measured using a differential capacitor that consist of of independent fixed plates and plates attached to the moving mass. The fixed plates are driven by 180^0 out of phase square waves. Acceleration deflects the moving mass and unbalances the differential capacitor resulting in sensor output whose amplitude is proportional to acceleration. Phase sensitive demodulation techniques are then used to determine the magnitude and direction of the acceleration.

- Mechanical sensor

The ADXL335 uses a single structure for sensing the sensing X,Y, and Z axes. As a result, the 3 axes sense directions are highly orthogonal and have little cross axis sensitivity.

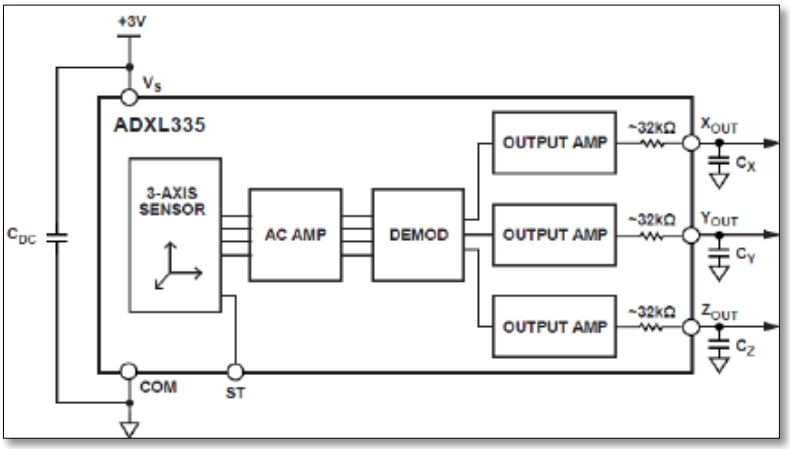

Fig.3.1.5.d Accelerometer

e. RF MODULE:

The name suggests, it operates at Radio Frequency. The corresponding frequency range varies between 30KHz and 300GHz. Transmission through RF is better than IR because of many reasons. Firstly, signals through RF can travel through larger distances making it suitable for long range applications. RF transmission is more strong and reliable than IR transmission.

This RF module comprises of an RF Transmitter and RF Receiver. The Transmitter/Receiver pair operates at a frequency 434MHz. An RF transmitter receives the serial data and transmits it wirelessly through RF through its antenna connected at pin4. The transmission occurs at the rate of 1Kbps to 10Kbps. The transmitted data is received by RF receiver operating at the same frequency as that of the transmitter.

The RF module is often used along with a pair of encoder/decoder. The encoder is used for encoding parallel data for transmission feed while reception is decoded by a decoder. HT12E-HT12D is used for encoder/decoder pair ICs.

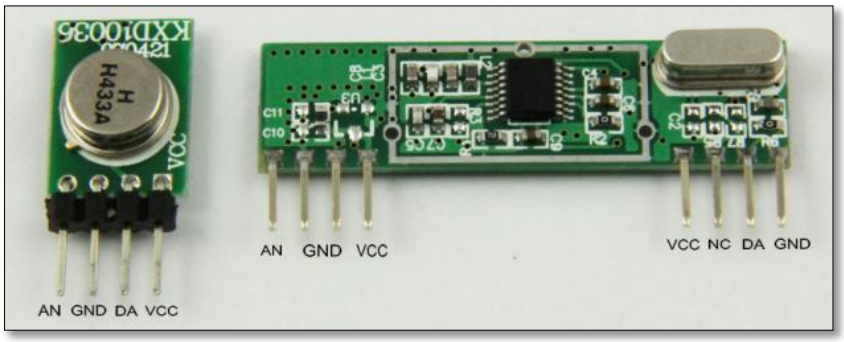

Fig.3.1.5.e RF Tx and RF Rx

- HT12E and HT12D:

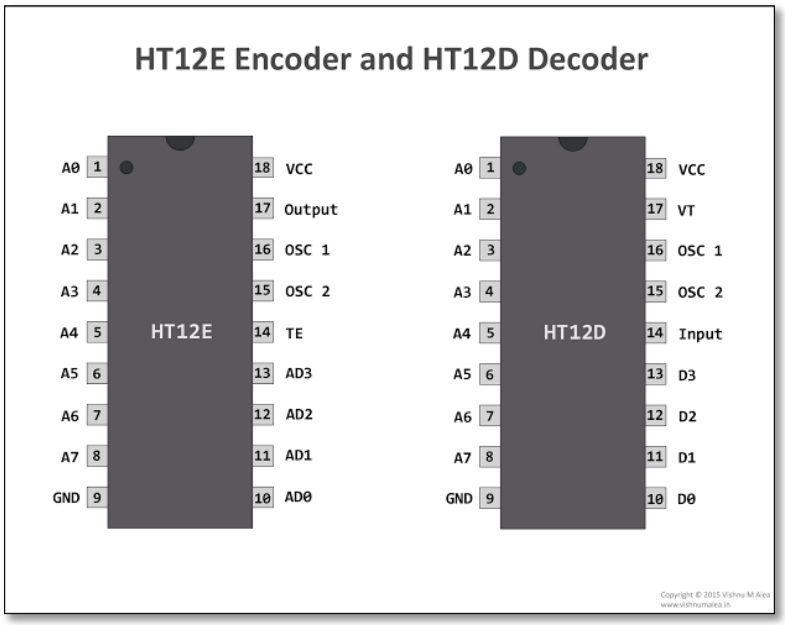

Fig. 3.1.5.e.i Pin out diagram of encoder and decoder

The HT12E Encoder ICs are series of CMOS LSls for remote control system applications. They are capable of encoding 12 bit of information which consists of 8 address bits and 4 data bits.

The HT12D decoder ICs are series of CMOS LSis for remote control system applications. These ICs are paired with each other for proper operation a pair of encoder/decoder with the same no. of address and data format should be selected. The

decoder receives the serial address and data, transmitted by a carrier using an RF transmission medium and gives output to the output pins after processing the data.

- Features of HT12E:
  - 18 pin DIP
  - Operating voltage- 2.4V to 12 V
  - Minimum transmission word =4
  - Data code has positive polarity
  - Low standby current- 0.1uA
  - Secure and robust protocol

- Features of HT12D:
  - 18 pin DIP
  - Operating voltage- 2.4V to 12 V
  - Secure and robust protocol
  - Low standby current- 0.1uA
  - Capable of decoding 12 bits of information
  - Received data is checked 3 times

f. LCD:

The LCD unit receives character codes from microprocessor or microcomputer, latches the code to its display data RAM transforms each character code into a 5*7 dot matrix character pattern, and displays the characters on its LCD screen.

The LCD unit incorporates a character generator ROM which produces 160 different 5*7 dot matrix character patterns. The unit also provides a character generator RAM through which the user may define up to 8 additional 5*7 dot matrix character patterns, as by the required applications.

- **Features:**
  - 80*8 bits
  - Character generator ROM
  - Character generator RAM

- Numerous instructions
- Interface with 4 or 8 bit microprocessor
- 8 different user programmed 5*7 dot matrix character patterns

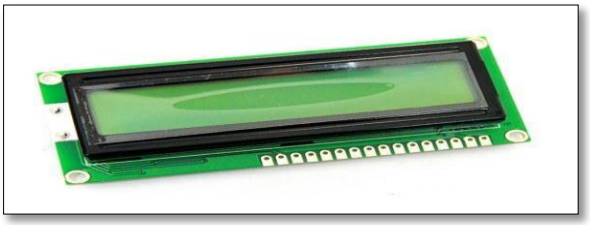

Fig. 3.1.5.f 16x2 LCD

3.2 SOFTWARE IMPLEMETATION:

3.2.1 Software used and its features:

a. Proteus 8 software
b. OrCAD
c. Arduino compiler
d. Keil compiler

Desription:

a. PROTEUS 8 software:

Proteus is a simulation and design software tool developed by Lab center Electronics for electronic center design. It also posses 2D CAD drawing feature.

It is software suite containing schematic, simulation as well as PCB designing. ISIS is the software used to draw schematics and simulate the circuits in the real time. The simulation allows human access during run time, thus providing real time simulation.

Features:

- ISIS has wide range of components in its library.

- It has the sources, signal generators, measurement and analysis tools like oscilloscope, voltmeter, ammeter etc, probes for real time monitoring of the parameters of the circuit, switches, displays, loads like motors and lamps, discrete components like resistors, inductors, capacitors, transformers, digital and analog integrated circuits, semi conductor switches, relays, sensors, microcontrollers, etc.

b. OrCAD:

OrCAD Systems Corporation was a software company that made OrCAD. The software is used to mainly by electronic design engineers and electronic technicians to create electronic schematics and electronic prints for manufacturing printed circuit boards.

OrCAD is suite of products for PCB design and analysis that includes a schematic editor (Capture), circuit simulator (PSpice), PCB layout solution (layout +).

Features:

- OrCAD symbol editor.
- Library supports and learning resources.
- OrCAD capture CIS(Component Information System)
- OrCAD capture- Creating Netlist
- OrCAD capture Custom Design Rule Check
- Database part search

Capture CIS:

OrCAD capture is a design suit application, part of OrCAD circuit design suite. Capture includes component information system (CIS), that links a component package footprint data or simulation behavior data, with the circuit symbol in the schematics.

Layout plus:

It is the printed circuit board designer application and the part of the OrCAD circuit design suite. Layout plus includes automation features for PCB design, board level analysis and design rule check (DRC).

The PCB design may be accomplished by manually tracing PCB tracks, or using auto-router provided. Layout Plus is integrates with OrCAD Capture, using the component information system (CIS) to store information about a certain circuit symbol and it's matching PCB footprint.

A footprint is used during board layout, and is where an electronic component gets soldered on to PCB. A footprints characteristics will vary depending on the mechanical dimensions and tolerances of the component, the standards used to create the footprint and design requirements.

c. Arduino compiler:

Arduino IDE is a lightweight, cross platform application that introduces programming to novices. It has both an online editor and an on-premise application, for users to have the option whether they want to save their sketches on the cloud or locally on their own computer.

With Arduino IDE, users can easily access contributed libraries and receive up-to-date support for the latest Arduino boards, so they can create sketches that are backed by the newest version of the IDE.

Features:

- Multi-platform application
- Board management
- Straightforward Sketching
- Project documentation
- Simple sketch sharing
- Vast library
- Third party hardware support

d. Keil compiler:

Keil development tools for the 8051 microcontroller architecture support every level of software developer from the professional applications enginner to the student just learning about embedded software development.

The industry standard Keil C Compilers, Macro Assemblers, debuggers, single board computer and Emulators support all 8051 derivatives and help your project completed on schedule.

3.2.2 SOFTWARE TESTING:

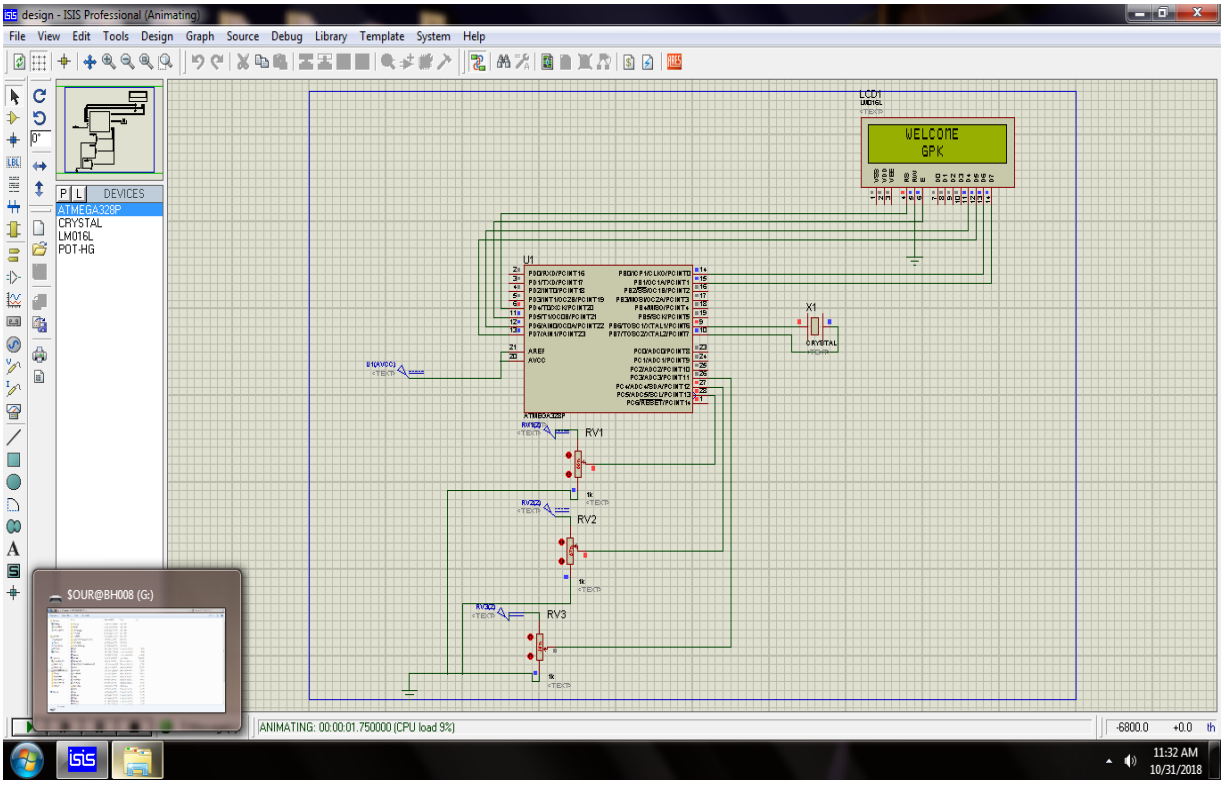

Fig. 3.2.2.a Interfacing of LCD with Arduino

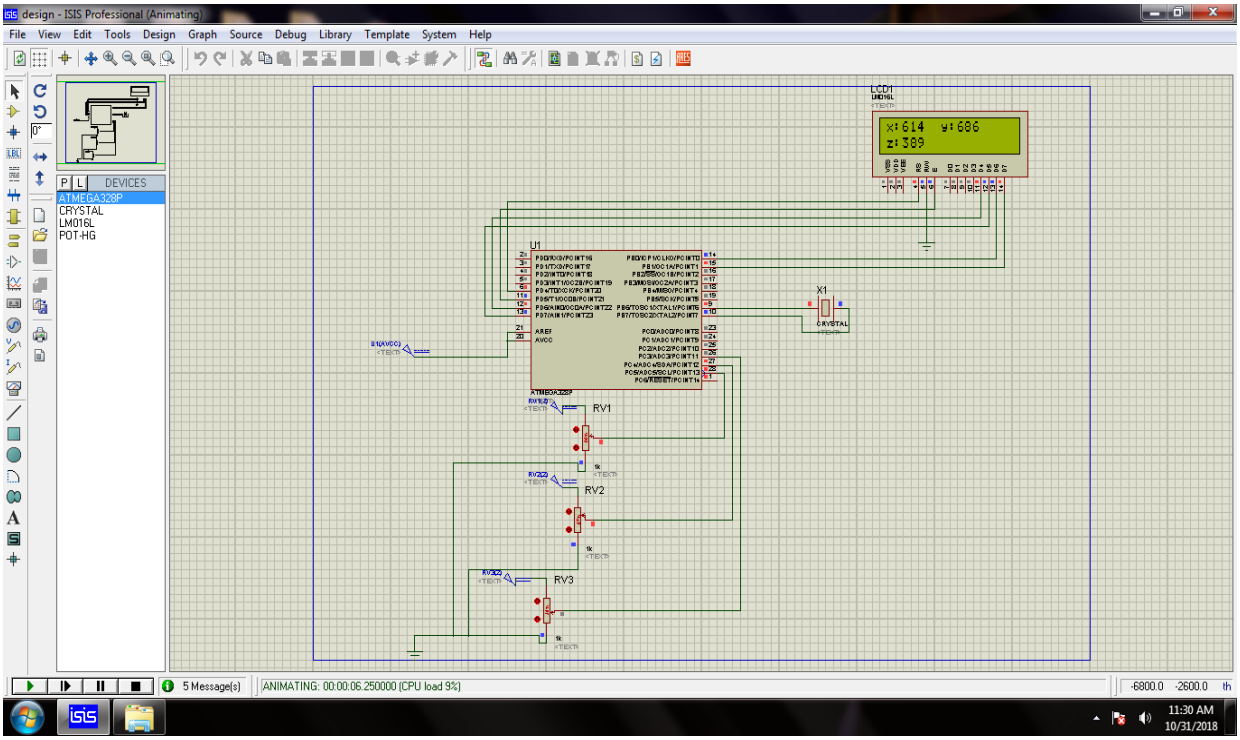

Fig. 3.2.2.b Interfacing of Accelerometer with Arduino

CHAPTER 4

RESULTS AND DISCUSSION

4.1 RESULTS:

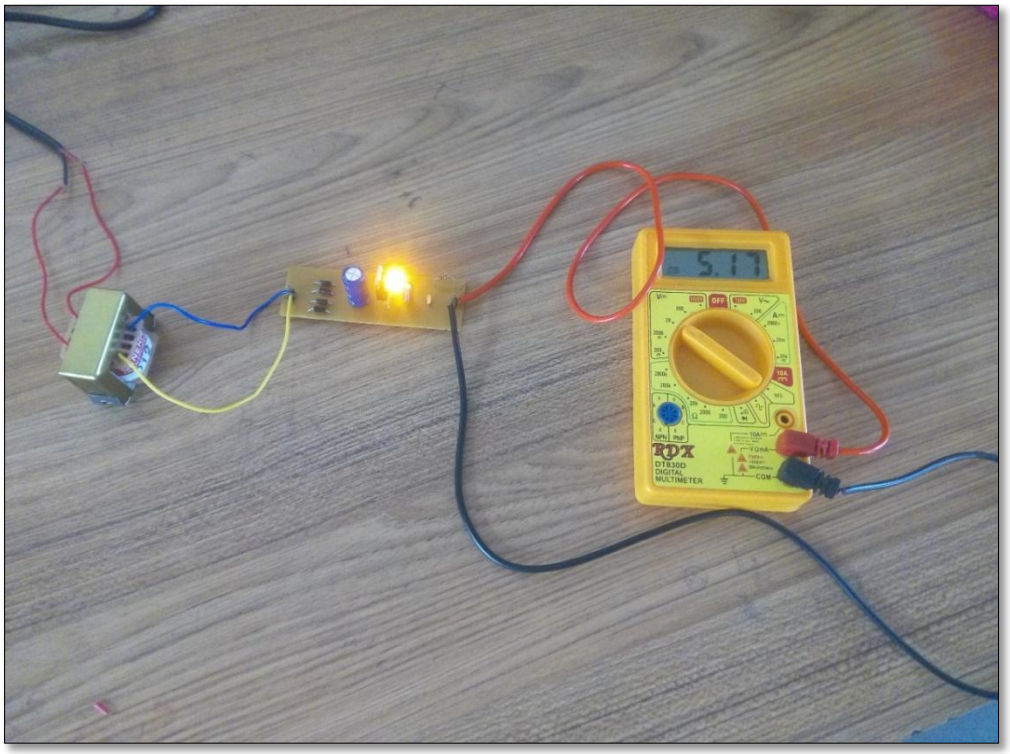

Fig. 4.1.1 5v power supply output

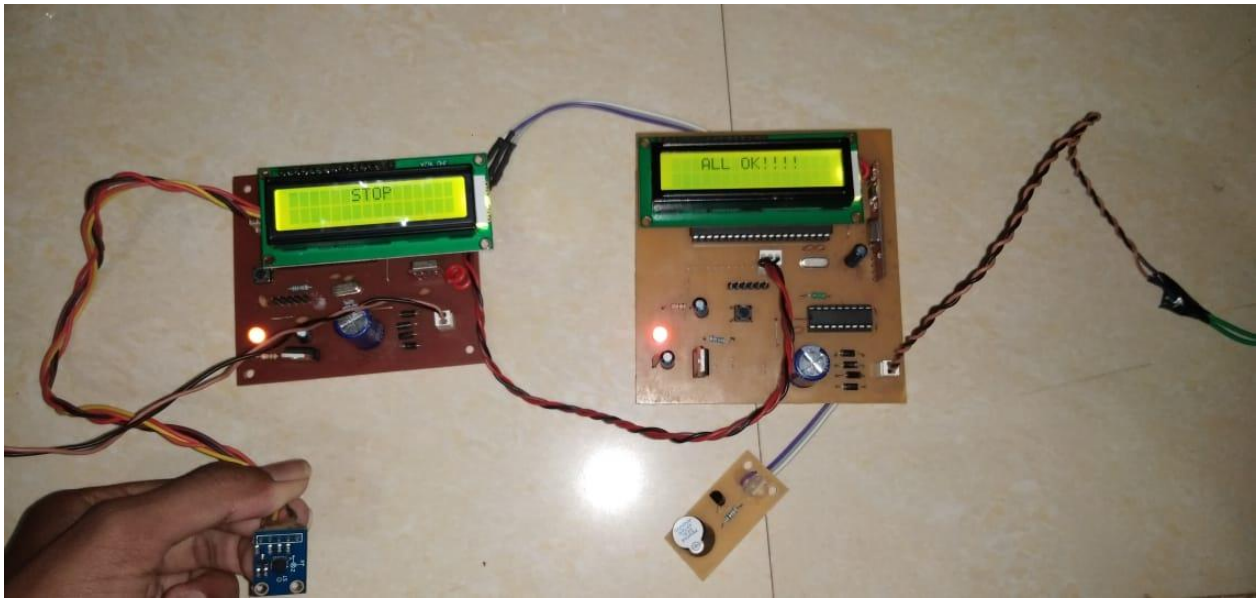

Fig. 4.1.2 Final Result

Fig. 4.1.3 Final Result

CHAPTER 5

CONCLUSION AND FUTURE SCOPE

5.1 ADVANTAGES:

1. Highly flexible
2. Quick response time
3. Reduces human efforts
4. High accuracy

5.2 CONCLUSION:

By taking an overall survey it can be found that there are many problems existing for the paralyzed people such as paralysis in their leg, hand, vocal track & also in their other body parts. There are systems existing for their comforts individually. But, this system will help to monitor all the factors that cause paralysis & intimate that to the caretakers so that treatment can be given before paralysis reaches hike.

Also this device has made conveyance of message possible only by the motion of a body part. The ease of message is the main advantage of this system. By implementing this system a simple device for paralyzed or disabled people can be achieved without the use of complex form of inputs. Our system successfully proves that this system is an excellent approach to be implemented not only at hospitals for patient-nurse communication but also in homes.

5.3 FUTURE SCOPE OF WORK:

1. With the help of GSM, the message can be sending on mobile phones.
2. By using flex sensor, it is easy to control the room equipments.
3. This project can be developed into an automatic wheel chair where the wheelchair will be moved by hand gesture.

CHAPTER 6

REFERENCE

REFERENCES

1. M. A. Mazadi -The 8051 MC & Embedded system.
2. Prof. R.K.Moje,; Abhijeet Botre; Sumit pakhare; Vikas Tupe, Department of Electronics, PDEA's College of Engineering, Assisting System for Paralyzed, International journal of innovative research in electrical, electronics, instrumentation and control engineering, Issued on 5th May, 2016.
3. Aishwarya Desai; Nishigandha Pawar; Kshitija Desai; Noopur Behrani, Student, Dept. of EXTC, VES Institute of Technology, Chembur, Mumbai, Motion Based Message Conveyor for Paralytic/Disabled, International journal of innovative research in computer and communication engineering, Issued on 3rd , March 2016.
4. Chandan V. Jha: PG student of Dept. of Electronics and Communication, Priyadarshini Bhagwati college, Nagpur. Internation journal of Automated paralysis healthcare system. Issued on January 2017-2018.

CHAPTER 7

APPENDIX

APPENDIX

Program

Transmitter:

```
#include <LiquidCrystal.h>


//LiquidCrystal lcd(rs, en, d4, d5, d6, d7);
LiquidCrystal lcd(13, 12, 11, 10, 9, 8);
int Ax, Ay, Az;
void setup() {


  pinMode(7, OUTPUT);
  pinMode(6, OUTPUT);
  pinMode(5, OUTPUT);
  pinMode(4, OUTPUT);
  // set up the LCD's number of columns and rows:
  lcd.begin(16, 2);
  // Print a message to the LCD.
  lcd.setCursor(0, 0);
  lcd.print("    WELCOME    ");
  lcd.setCursor(0, 1);
  lcd.print("       GPK     ");
  delay(2000);
  lcd.clear();
  lcd.setCursor(0, 0);
  lcd.print("    Automated   ");
  lcd.setCursor(0, 1);
```

```
  lcd.print("Paralysis Patient");
  delay(2000);
  lcd.clear();
  lcd.setCursor(0, 0);
  lcd.print("Healthcare System");
}
void loop() {
  lcd.clear();
  // put your main code here, to run repeatedly:
    Ax = analogRead(A3);
    Ay = analogRead(A4);
    Az = analogRead(A5);
//    lcd.clear();
//    lcd.setCursor(0, 0);
//    lcd.print("X:");
//    lcd.print(Ax);
//    lcd.print("    Y:");
//    lcd.print(Ay);
//    lcd.setCursor(0, 1);
//    lcd.print("Z:");
//    lcd.print(Az);
//    delay(2000);
    if(Ax<300)
    {
      digitalWrite(7,LOW);
      digitalWrite(6,LOW);
      digitalWrite(5,LOW);
```

```
  digitalWrite(4,LOW);
lcd.setCursor(0, 0);
lcd.print("      LEFT      ");
}
if(Ax>400)
{
  digitalWrite(7,LOW);
  digitalWrite(6,HIGH);
  digitalWrite(5,LOW);
  digitalWrite(4,LOW);
lcd.setCursor(0, 0);
lcd.print("      RIGHT      ");
}
if(Ay<300)
{
  digitalWrite(7,HIGH);
  digitalWrite(6,LOW);
  digitalWrite(5,LOW);
  digitalWrite(4,LOW);
lcd.setCursor(0, 0);
lcd.print("      UP      ");
}
if(Ay>400)
{
  digitalWrite(7,HIGH);
  digitalWrite(6,HIGH);
  digitalWrite(5,LOW);
```

```
    digitalWrite(4,LOW);
   lcd.setCursor(0, 0);
   lcd.print("      DOWN      ");
   }
   if (((300 < Ax) && (Ax < 400)) && ((300 < Ay) && (Ay < 400)))
  {
   digitalWrite(7, HIGH);
   digitalWrite(6, HIGH);
   digitalWrite(5, HIGH);
   digitalWrite(4, HIGH);
   //lcd.clear();
   lcd.setCursor(0, 0);
   lcd.print("     STOP     ");
   //delay(200);
  }
   delay(100);
}
```

Receiver:

```
 (Addr); #include<reg51.h>
#include "Proto.h"
#include "Portconfig.h"

void DisplayTitle();
void InitLCD();
void Printline(unsigned char Addr, unsigned char *ptr, unsigned char count);
void SendLCDCommand(unsigned char cmd);
void SendLCDData(unsigned char Dbyte);

code unsigned char Msg_Title1[] =  "     WECOME     ";
code unsigned char Msg_Title2[] =  "       GPK      ";
code unsigned char Msg_Title3[] =  "    Automated   ";
code unsigned char Msg_Title4[] =  "Paralysis Patient";
code unsigned char Msg_Title5[] =  "Healthcare System";

code unsigned char Msg_Title6[] =  "      Water     ";
code unsigned char Msg_Title7[] =  "      Dinner    ";
code unsigned char Msg_Title8[] =  "     Lunch      ";
code unsigned char Msg_Title9[] =  "   Breakfast    ";
code unsigned char Msg_Title10[] =  "   ALL OK!!!!   ";
code unsigned char Msg_Title11[] =  "   EMERGENCY    ";

void main()
{                                   Buzz=1;
   InitLCD();
```

```
//                      DisplayTitle();
                        Printline(0x80, &Msg_Title1[0], 16);
                        Printline(0xc0, &Msg_Title2[0], 16);
                        Delay_ms(2000);
                        SendLCDCommand(0x01);
                        Printline(0x80, &Msg_Title3[0], 16);
                        Printline(0xc0, &Msg_Title4[0], 16);
                        Delay_ms(2000);
                        SendLCDCommand(0x01);
                        Printline(0x80, &Msg_Title5[0], 16);
                        Delay_ms(2000);
                        SendLCDCommand(0x01);
                        while(1)
                        {
                          if(A==0 && E==0 && C==0 && D==0)
                          {

                                Printline(0x80, &Msg_Title6[0], 16);
                                Buzz=0;
                                Delay_ms(100);
                                Buzz=1;

                          }
                          if(A==0 && E==1 && C==0 && D==0)
                          {

                             Printline(0x80, &Msg_Title7[0], 16);
```

```
            Buzz=0;
            Delay_ms(100);
            Buzz=1;

        }
            if(A==1 && E==0 && C==0 && D==0)
        {

          Printline(0x80, &Msg_Title8[0], 16);
            Buzz=0;
            Delay_ms(100);
            Buzz=1;

        }
            if(A==1 && E==1 && C==0 && D==0)
        {

            Printline(0x80, &Msg_Title9[0], 16);
            Buzz=0;
            Delay_ms(100);
            Buzz=1;

        }
        if(A==1 && E==1 && C==1 && D==0)
        {

            Printline(0x80, &Msg_Title11[0], 16);
```

```
                    Buzz=0;
                    Delay_ms(50);
                    Buzz=1;

                }
                    if(A==1 && E==1 && C==1 && D==1)
                {

                    Printline(0x80, &Msg_Title10[0], 16);

                }

    }
}

void Printline(unsigned char Addr, unsigned char *ptr, unsigned char count)
{
                unsigned char ch;
                SendLCDCommand

                for(count; count > 0; count--)
                {
                  ch = *ptr;
                  SendLCDData(ch);
                  ptr++;
                }
}
```

```
void SendLCDData(unsigned char Dbyte)
{
                    LCD_RS = 1;
                    LCD_DATABUS = Dbyte;
                    LCD_EN = 1;
                    Delay_us(50);
                    LCD_EN = 0;
                    Delay_us(200);
}

void InitLCD()
{
                    Delay_ms(20);
                    SendLCDCommand(0x38);
                    Delay_ms(5);
//                  SendLCDCommand(0x38);
//                  Delay_ms(5);
//                  SendLCDCommand(0x38);
                    //Delay_us(200);
                    SendLCDCommand(0x0C);
                    SendLCDCommand(0x06);
                    SendLCDCommand(0x14);
                    SendLCDCommand(0x01);
                    Delay_ms(5);
}
```

```
void SendLCDCommand(unsigned char cmd)
{
        LCD_RS = 0;
        LCD_DATABUS = cmd;
        LCD_EN = 1;
        Delay_us(50);
        LCD_EN = 0;
        Delay_us(200);
}


void Delay_us(unsigned char dtime2)
{
        for(dtime2; dtime2 > 0; dtime2--)
        {
        }
}
```

```
void Delay_ms(unsigned int dtime)
{
                    unsigned int dtime1;

                    for(;dtime > 0; dtime--)
                    {
                      for(dtime1 = 120; dtime1 > 0; dtime1--)
                      {

                      }
                    }
}
```